Al TAKAMUL COMPANY FOR ENGINEERING TESTS AND PROFESSIONAL SAFETY LIMITED
Basra, North Rumaila, Quality Control Yard - Iraq
Tel: +9647834966105 / +9647834964657
Email: ashraf.said@qualitycontrol-iraq.com / hany.akafi@qualitycontrol-iraq.com

CERTIFICATE OF THOROUGH EXAMINATION

This Certificate complies with the requirements of the Lifting Equipment Operations and Lifting Equipment Regulations

Date of Examination:	01/07/2025	**Date of Report:**	01/07/2025	**Certificate No:**	QC-WPS-25-0102/057
Client Name:	HALLIBURTON	**Location:**	WPS WORKSHOP	**Job Number:**	0102

Serial Number:	QTY	Description	SWL	Date of manufacture if known:	Date of last thorough examination
B8725	01	**SAFETY PIN BOW SHACKLE** **MANUFACTURER:** TOYO **SIZE:** 3/4'' **GRADE:** 6 **FOS:** 6:1	4.75 T	N/A	**12/11/2024**
Reference Standard:		**BS EN 13889/ HAL DOC: ST-GL-HAL-HSE-0420**			

Is this the first examination after Installation or assembly at a new site or location?	YES		NO	√	Was the examination carried out: Within an interval of 6 months?	YES	√	NO	
					With an interval of 12 months?	YES		NO	√
If the answer to the above question is YES has the equipment been installed correctly?	YES		NO		In accordance with an examination scheme?	YES	√	NO	
					After the occurrence of exceptional circumstances?	YES		NO	√

Identification of any part found to have a defect which is or could not become a danger to persons and a description of the defect: (If none Sate NONE) NONE				
Is the above a defect which is of immediate danger to persons:	YES		NO	√
Is the above a defect which is not yet but could become a danger to persons (If YES state the date by when)	N/A			
Particulars of any repair, renewal or alteration required to remedy the defect identified above:				
Particulars of any tests carried out as part of the examination: (If none state NONE) The subject Items were inspected Visually and dimensionally where no signs of defects were observed at the time of inspection and found satisfactory				
IS THIS EQUIPMENT SAFE TO OPERATE?	YES	√	NO	

Name of Inspector:	Name of person authenticating this report:	Client Signature & Stamp:
ASHRAF ELSAID	MOHAMED ABDALLAH	ALI Talib HB48903 Date: 02-JULY-2025 Signature Haliburton
Date of Next Through Examination:	30/12/2025	

REV: 01 Dated: 20 June 2022

THIS IS TO CERTIFY THAT; a competent person, at the above-mentioned owner's work location on the date shown above and the equipment described in this report was tested & inspected as per the requirements of Lifting Operations Lifting Equipment Regulation "LOLER". The result was found Satisfactory at the time of inspection and considered Safe for Lifting.

Al TAKAMUL COMPANY FOR ENGINEERING TESTS
AND PROFESSIONAL SAFETY LIMITED
Basra, North Rumaila, Quality Control Yard - Iraq
Tel: +9647810009138 / +9647834964657
Email: OP@qualitycontrol-iraq.com / hany.akafi@qualitycontrol-iraq.com

CERTIFICATE OF THOROUGH EXAMINATION

This Certificate complies with the requirements of the Lifting Equipment Operations and Lifting Equipment Regulations

Date of Examination:	01/07/2025	Date of Report:	01/07/2025	Certificate No:	QC-WPS-25-0102/058
Client Name:	HALLIBURTON	Location:	WPS WORKSHOP	Job Number:	0102

Serial Number:	QTY	Description	SWL	Date of manufacture if known:	Date of last thorough examination
BLP-178975-10	1	**SINGLE LEG CHAIN SLING** **C/W MASTERLINK AT THE TOP & GRAB HOOK AT THE END** **MANUFACTURER:** BISHOP LIFTING **DIM: 3/4**" DIA X 10 FT (L) **FOS:** 4:1	35300 LBS	05/28/09	**22/02/2025**
Reference Standard:		**BS EN 818-4/ HAL DOC: ST-GL-HAL-HSE-0420**			

Is this the first examination after Installation or assembly at a new site or location?	YES		NO	√	Was the examination carried out:			
					Within an interval of 6 months?	YES	√	NO	
					With an interval of 12 months?	YES		NO	√
If the answer to the above question is YES has the equipment been installed correctly?	YES		NO		In accordance with an examination scheme?	YES	√	NO	
					After the occurrence of exceptional circumstances?	YES		NO	√

Identification of any part found to have a defect which is or could not become a danger to persons and a description of the defect: (If none Sate NONE) NONE				
Is the above a defect which is of immediate danger to persons:	YES		NO	√
Is the above a defect which is not yet but could become a danger to persons (If YES state the date by when)	N/A			
Particulars of any repair, renewal or alteration required to remedy the defect identified above:				
Particulars of any tests carried out as part of the examination: (If none state NONE) The subject Items were inspected Visually and dimensionally where no signs of defects were observed at the time of inspection and found satisfactory				
IS THIS EQUIPMENT SAFE TO OPERATE?	YES	√	NO	

Name of Inspector:	Name of person authenticating this report:	Client Signature & Stamp:
ASHRAF ELSAID	MOHAMED ABDALLAH	ALI Talib HB48903 Date: 02-JULY-2025 Signature Haliburton
Date of Next Through Examination:	30/12/2025	

REV: 01 Dated: 20 June 2022

THIS IS TO CERTIFY THAT; a competent person did attend the above-mentioned owner's work location on the date shown above and the equipment described in this report was tested & inspected as per the requirements of Lifting Operations Lifting Equipment Regulation "LOLER". The result was found Satisfactory at the time of Inspection and considered Safe for Lifting.

Al TAKAMUL COMPANY FOR ENGINEERING TESTS
AND PROFESSIONAL SAFETY LIMITED
Basra, North Rumaila, Quality Control Yard - Iraq
Tel: +9647810009138 / +9647834964657
Email: OP@qualitycontrol-iraq.com / hany.akafi@qualitycontrol-iraq.com

CERTIFICATE OF THOROUGH EXAMINATION

This Certificate complies with the requirements of the Lifting Equipment Operations and Lifting Equipment Regulations

Date of Examination:	01/07/2025	Date of Report:	01/07/2025	Certificate No:	QC-WPS-25-0102/059
Client Name:	HALLIBURTON	Location:	WPS WORKSHOP	Job Number:	0102

Serial Number:	QTY	Description	SWL	Date of manufacture if known:	Date of last thorough examination
BLP-311956-011	1	**SINGLE LEG CHAIN SLING** **C/W MASTERLINK AT THE TOP & GRAB HOOK AT THE END** **MANUFACTURER:** BISHOP LIFTING **DIM: 3/4**" DIA X 20 FT (L) **FOS:** 4:1	35300 LBS	N/A	**16/09/2024**
Reference Standard:		**BS EN 818-4/ HAL DOC: ST-GL-HAL-HSE-0420**			

Is this the first examination after Installation or assembly at a new site or location?	YES		NO	√	Was the examination carried out:			
					Within an interval of 6 months?	YES	√	NO	
					With an interval of 12 months?	YES		NO	√
If the answer to the above question is YES has the equipment been installed correctly?	YES		NO		In accordance with an examination scheme?	YES	√	NO	
					After the occurrence of exceptional circumstances?	YES		NO	√

Identification of any part found to have a defect which is or could not become a danger to persons and a description of the defect: (If none Sate NONE) NONE				
Is the above a defect which is of immediate danger to persons:	YES		NO	√
Is the above a defect which is not yet but could become a danger to persons (If YES state the date by when)	N/A			
Particulars of any repair, renewal or alteration required to remedy the defect identified above:				
Particulars of any tests carried out as part of the examination: (If none state NONE) The subject Items were inspected Visually and dimensionally where no signs of defects were observed at the time of inspection and found satisfactory				
IS THIS EQUIPMENT SAFE TO OPERATE?	YES	√	NO	

Name of Inspector:	Name of person authenticating this report:	Client Signature & Stamp:
ASHRAF ELSAID	MOHAMED ABDALLAH	ALI Talib HB48903 Date: 02-JULY-2025 Signature Haliburton
Date of Next Through Examination:	30/12/2025	

REV: 01 Dated: 20 June 2022

THIS IS TO CERTIFY THAT; a competent person did attend the above-mentioned owner's work location on the date shown above and the equipment described in this report was tested & inspected as per the requirements of Lifting Operations Lifting Equipment Regulation "LOLER". The result was found Satisfactory at the time of Inspection and considered Safe for Lifting.

Al TAKAMUL COMPANY FOR ENGINEERING TESTS
AND PROFESSIONAL SAFETY LIMITED
Basra, North Rumaila, Quality Control Yard - Iraq
Tel: +9647810009138 / +9647834964657
Email: OP@qualitycontrol-iraq.com / hany.akafi@qualitycontrol-iraq.com

CERTIFICATE OF THOROUGH EXAMINATION

This Certificate complies with the requirements of the Lifting Equipment Operations and Lifting Equipment Regulations

Date of Examination:	01/07/2025	Date of Report:	01/07/2025	Certificate No:	QC-WPS-25-0102/060
Client Name:	HALLIBURTON	Location:	WPS WORKSHOP	Job Number:	0102

Serial Number:	QTY	Description	SWL	Date of manufacture if known:	Date of last thorough examination
DH55	1	**SINGLE LEG CHAIN SLING** **C/W HOOK AT BOTH ENDS** **MANUFACTURER:** BISHOP LIFTING PRODUCTS **DIM:** 3/8" DIA X 3 FT (L) **FOS:** 4:1	7,100 LBS	05.12.2013	**12/011/2024**
Reference Standard:		**BS EN 818-4/ HAL DOC: ST-GL-HAL-HSE-0420**			

Is this the first examination after Installation or assembly at a new site or location?	YES		NO	√	Was the examination carried out:			
					Within an interval of 6 months?	YES	√	NO	
					With an interval of 12 months?	YES		NO	√
If the answer to the above question is YES has the equipment been installed correctly?	YES		NO		In accordance with an examination scheme?	YES	√	NO	
					After the occurrence of exceptional circumstances?	YES		NO	√

Identification of any part found to have a defect which is or could not become a danger to persons and a description of the defect: (If none Sate NONE) NONE				
Is the above a defect which is of immediate danger to persons:	YES		NO	√
Is the above a defect which is not yet but could become a danger to persons (If YES state the date by when)	N/A			
Particulars of any repair, renewal or alteration required to remedy the defect identified above:				
Particulars of any tests carried out as part of the examination: (If none state NONE) The subject Items were inspected Visually and dimensionally where no signs of defects were observed at the time of inspection and found satisfactory				
IS THIS EQUIPMENT SAFE TO OPERATE?	YES	√	NO	

Name of Inspector:	Name of person authenticating this report:	Client Signature & Stamp:
ASHRAF ELSAID	MOHAMED ABDALLAH	ALI Talib HB48903 Date: 02-JULY-2025 Signature Haliburton
Date of Next Through Examination:	30/12/2025	

REV: 01 Dated: 20 June 2022

THIS IS TO CERTIFY THAT; a competent person did attend the above-mentioned owner's work location on the date shown above and the equipment described in this report was tested & inspected as per the requirements of Lifting Operations Lifting Equipment Regulation "LOLER". The result was found Satisfactory at the time of Inspection and considered Safe for Lifting.

Al TAKAMUL COMPANY FOR ENGINEERING TESTS
AND PROFESSIONAL SAFETY LIMITED
Basra, North Rumaila, Quality Control Yard - Iraq
Tel: +9647810009138 / +9647834964657
Email: OP@qualitycontrol-iraq.com / hany.akafi@qualitycontrol-iraq.com

CERTIFICATE OF THOROUGH EXAMINATION

This Certificate complies with the requirements of the Lifting Equipment Operations and Lifting Equipment Regulations

Date of Examination:	01/07/2025	Date of Report:	01/07/2025	Certificate No:	QC-WPS-25-0102/061
Client Name:	HALLIBURTON	Location:	WPS WORKSHOP	Job Number:	0102

Serial Number:	QTY	Description	SWL	Date of manufacture if known:	Date of last thorough examination
USKP5243884-2-1	01	**T CLAMP** **Manufacturer:** COOPER MANUFACTURING & SUPPLY INC. **S.F:** 4:1	20000 LBS	N/A	13/10/2024
Reference Standard:		**HAL DOC: ST-GL-HAL-HSE-0420**			

Is this the first examination after Installation or assembly at a new site or location?	YES		NO	√	Was the examination carried out:			
					Within an interval of 6 months?	YES	√	NO	
					With an interval of 12 months?	YES		NO	√
If the answer to the above question is YES has the equipment been installed correctly?	YES		NO		In accordance with an examination scheme?	YES	√	NO	
					After the occurrence of exceptional circumstances?	YES		NO	√

Identification of any part found to have a defect which is or could not become a danger to persons and a description of the defect: (If none Sate NONE) NONE				
Is the above a defect which is of immediate danger to persons:	YES		NO	√
Is the above a defect which is not yet but could become a danger to persons (If YES state the date by when)	N/A			
Particulars of any repair, renewal or alteration required to remedy the defect identified above:				
Particulars of any tests carried out as part of the examination: (If none state NONE) The subject Items were inspected Visually and dimensionally where no signs of defects were observed at the time of inspection and found satisfactory				
IS THIS EQUIPMENT SAFE TO OPERATE?	YES	√	NO	

Name of Inspector:	Name of person authenticating this report:	Client Signature & Stamp:
ASHRAF ELSAID	MOHAMED ABDALLAH	ALI Talib HB48903 Date: 02-JULY-2025 Signature Haliburton
Date of Next Through Examination:	30/12/2025	

REV: 01 Dated: 20 June 2022

THIS IS TO CERTIFY THAT; a competent person did attend the above-mentioned owner's work location on the date shown above and the equipment described in this report was tested & inspected as per the requirements of Lifting Operations Lifting Equipment Regulation "LOLER". The result was found Satisfactory at the time of inspection and considered Safe for Lifting.

Al TAKAMUL COMPANY FOR ENGINEERING TESTS PROFESSIONAL SAFETY LIMITED

North Rumaila, Quality Control Yard - Iraq

QUALITY CONTROL

CERTIFICATION OF VISUAL THOROUGH EXAMINATON & DYE PENETRANT INSPECTION

CLIENT:	HALLIBURTON WPS	REPORT NO.	QC-25-1020-WPS-NDT-062
LOCATION:	WPS YARD	NEXT INSPECTION DATE:	Tuesday, December 30, 2025
INSPECTION DATE:	Tuesday, July 1, 2025	ACCEPTANCE CREATERA	ASTM E165-23
TYPE OF INSPECTION:	VISUAL , THOROUGH EXAMINATION & DYE PENETRANT INSPECTION (DPI)	HAL DOCUMENTS NO	Halliburton Doc. (LPI ProcedureD00976849 Revision F (HAL DOC: ST-GL-HAL-HSE-0420)

DESCRIPTION:	C PLATE	SWL:	5000 LBS	SERIAL NUMBER:	26504-04 , 27069-03 , 13467586
				SIZE:	3-3/8 - 3-5/8

INSPECTION RESULT :	
VISUAL , THOROUGH EXAMINATION	Above Item fully inspected and found freedom from deforms, cracks, corrosion & mechanical damage
DYE PENETRANT INSPECTION (DPI)	forgn areas inspected and found freedom from cracks and other defects
FINAL RESULTS	Above Item found satisfactory and free of defectsat the time of inspection

TECHNICAL DETAILS			
TECHNIQUE 2 - TYPE II VISIBLE, METHOD 'A' WATER -WASHABLE			
PENETRANT DWELL TIME:	30 minutes	DEVELOPER DWELL TIME:	15 minutes
Test Part Temperature:	102 °F	WHITE LIGHT INTENSITY:	3620 LUX

EQUIPMENT DETAILS

EQUIPMENT :	COMPARATOR BLOCK	EQUIPMENT :	Digital Lux Meter	EQUIPMENT :	INFRARED THERMOMETER
S.N:	11223	S.N:	2722003	S.N:	201704125
Cal Due Date:	08,OCT,2025	Cal Due Date:	08,OCT,2025	Cal Due Date:	07,OCT,2025

Red Penetrant Manufacture:	Magnaflux	Batch No:	230206	EXPIRE DATE:	FEB,2026
Developer Manufacture:	Magnaflux	Batch No:	230608	EXPIRE DATE:	JUNE,2026
WATER PRESSURE	30 PSI	P. GAUGE	SSR825	DUE CAL DATE:	07,OCT,2025

PERSONNEL DETAILS

INSPECTOR NAME: ASHRAF ELSAID

QUALIFICATION: ASNT LEVEL II MT & PT& VT & UT

SIGNATURE:

Al Takamul Company LIFE QUALITY CONTROL For Engineering Services

REVIEW BY

SENIOR INSPECTOR: MOHAMED ABDALLAH

CLIENT: ALI Talib HB48903 Date: 02-JULY-2025 Signature Haliburton

Original - Client Files Copy - Area Office QC/FN/DPI/NDT/022 Rev.00 Dated: 07 Nov 2021

Al TAKAMUL COMPANY FOR ENGINEERING TESTS AND PROFESSIONAL SAFETY LIMITED

Basra, North Rumaila, Quality Control Yard - Iraq

QUALITY CONTROL

CERTIFICATION OF VISUAL THOROUGH EXAMINATON & DYE PENETRANT INSPECTION

CLIENT:	HALLIBURTON WPS	REPORT NO.	QC-25-1020-WPS-NDT-063
LOCATION:	WPS YARD	NEXT INSPECTION DATE:	Tuesday, December 30, 2025
INSPECTION DATE:	Tuesday, July 1, 2025	ACCEPTANCE CREATERA	ASTM E165-23
TYPE OF INSPECTION:	VISUAL , THOROUGH EXAMINATION & DYE PENETRANT INSPECTION (DPI)	HAL DOCUMENTS NO	Halliburton Doc. (LPI ProcedureD00976849 Revision F (HAL DOC: ST-GL-HAL-HSE-0420)

DESCRIPTION:	STAND	SWL:	2 TON

SERIAL NUMBER:	AMA-86

INSPECTION RESULT :	
VISUAL , THOROUGH EXAMINATION	Above Item fully inspected and found freedom from deforms, cracks, corrosion & mechanical damage
DYE PENETRANT INSPECTION (DPI)	forgn areas inspected and found freedom from cracks and other defects
FINAL RESULTS	Above Item found satisfactory and free of defectsat the time of inspection

TECHNICAL DETAILS

TECHNIQUE 2 - TYPE II VISIBLE, METHOD 'A' WATER -WASHABLE

PENETRANT DWELL TIME:	30 minutes	DEVELOPER DWELL TIME:	15 minutes
Test Part Temperature:	102 °F	WHITE LIGHT INTENSITY:	3620 LUX

EQUIPMENT DETAILS

EQUIPMENT :	COMPARATOR BLOCK	EQUIPMENT :	Digital Lux Meter	EQUIPMENT :	INFRARED THERMOMETER
S.N:	11223	S.N:	2722003	S.N:	201704125
Cal Due Date:	08,OCT,2025	Cal Due Date:	08,OCT,2025	Cal Due Date:	07,OCT,2025

Red Penetrant Manufacture:	Magnaflux	Batch No:	230206	EXPIRE DATE:	FEB,2026
Developer Manufacture:	Magnaflux	Batch No:	230608	EXPIRE DATE:	JUNE,2026
WATER PRESSURE	30 PSI	P. GAUGE	SSR825	DUE CAL DATE:	07,OCT,2025

PERSONNEL DETAILS

INSPECTOR NAME: ASHRAF ELSAID

QUALIFICATION: ASNT LEVEL II MT & PT& VT & UT

SIGNATURE:

Al Takamul Company NDT QUALITY CONTROL For Engineering Services

REVIEW BY

SENIOR INSPECTOR: MOHAMED ABDALLAH

CLIENT: ALi Talib HB48903 Date: 02-JULY-2025 Signature Haliburton

Original - Client Files Copy - Area Office QC/FN/DPI/NDT/022 Rev.00 Dated: 07 Nov 2021

Al TAKAMUL COMPANY FOR ENGINEERING TESTS AND PROFESSIONAL SAFETY LIMITED

Basra, North Rumaila, Quality Control Yard - Iraq

QUALITY CONTROL

CERTIFICATE OF VISUAL, THOROUGH EXAMINATION & MAGNETIC PARTICLE INSPECTION

Client:	HALLIBURTON (WPS)	**Report No:**	QC/25/HALL-WPS-1020-064
Location:	WPS YARD	**Job Number:**	1020
Inspection Date:	Tuesday, July 1, 2025	**Next Inspection Date:**	Wednesday, December 31, 2025
Type Of Inspection:	VISUAL , THOROUGH EXAMINATION & MAGNETIC PARTICLE INSPECTION	**Specification:**	DS-1 Volume 4- 5th Edition Halliburton Doc. (Visual Procedure D00305796 Revision Z) Halliburton Doc. (MPI Procedure D00976850 Revision E)

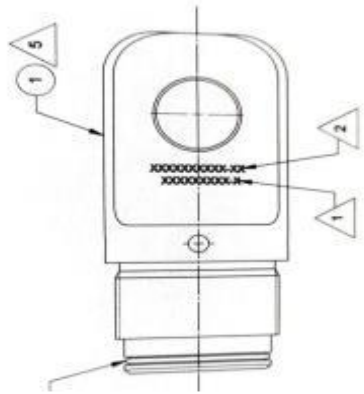

UNIT DESCRIPTION:	**LIFTING CAP (3 1/4 - 6 STUB ACME (3 5/8 DITS)) PIN**
UNIT S/N:	**4517241443-2-3**
LIFTING CAP SWL:	**10000 LBS**

INSPECTION RESULT :

VISUAL , THOROUGH EXAMINATION	unit fully inspected and found free from deforms, cracks, corrosion & mechanical damage
MAGNETIC PARTICLE INSPECTION	Thread & Avaliable critical areas inspected and found free from cracks and other defects
FINAL RESULTS	THE ABOVE INSPECTED AREAS WAS ACCEPTED

COMMENT:

MPI Wet Fluorescent inspection Thread With UltraViolet Light

Magnetic Particle Inspection With A/C Hand Yoke , Black & White Contrast

Online Traceability

EQUIPMENT DETAILS

EQUIPMENT :	AC/DC HAND Yoke	**EQUIPMENT :**	Shooting Coil DC	**EQUIPMENT :**	UV BLACK LIGHT: 3120 µw/cm²
S.NO:	201504052	**S.NO:**	22650	**S.NO:**	87521
Cal Due Date:	07.OCT.2025	**Cal Due Date:**	08.OCT.2025	**Cal Due Date:**	09.OCT.2025

FLUORESCENT 14HF	Magnaflux	**Batch No:**	230503	EXPIRE DATE:	MAY.2026
Whie Contrast Paint Manufacture:	Magnaflux	**Batch No:**	230408	EXPIRE DATE:	APRIL,2026

Digital Lux Meter WHITE LIGHT INTENSITY:	**TECHNICAL DETAILS**		**Black Magnetic Ink Manufacture:7HF**	
3670 Lux/S.NO:2722003	Wet FLUORESCENT Particle Concentration 14 HF	0.1 to 0.4 ml/100 ml	Batch No:230604	
Cal Due Date:09.OCT.2025	Black Magnetic Ink Concentration 7 HF	1.2 to 2.4 ml/100 ml	EXPIRE DATE:	JUNE.2026

PERSON DETAILS

INSPECTOR NAME: M.Shahzad Ahmed

QUALIFICATION: ASNT LEVEL II MT & PT & VT

STAMP & SIGNATURE:

Al Takamul Company NDT QUALITY CONTROL For Engineering Services

REVIEW BY

SENIOR INSPECTOR: MOHAMED ABDALLAH

SUPERVISOR: HANI ALI

CLIENT: ALI Talib HB48903
Date: 02-JULY-2025
Signature
Haliburton

Original - Client Files Copy - Area Office QC/FN/MPI/065 Rev.00 DATED 07 NOV 2021

Al TAKAMUL COMPANY FOR ENGINEERING TESTS AND PROFESSIONAL SAFETY LIMITED

Basra, North Rumaila, Quality Control Yard - Iraq

QUALITY CONTROL

CERTIFICATE OF VISUAL, THOROUGH EXAMINATION & MAGNETIC PARTICLE INSPECTION

Client:	HALLIBURTON (WPS)	**Report No:**	QC/25/HALL-WPS-1020-065
Location:	WPS YARD	**Job Number:**	1020
Inspection Date:	Tuesday, July 1, 2025	**Next Inspection Date:**	Tuesday, December 30, 2025
Type Of Inspection:	VISUAL , THOROUGH EXAMINATION & MAGNETIC PARTICLE INSPECTION	**Specification:**	DS-1 Volume 4- 5th Edition Halliburton Doc. (Visual Procedure D00305796 Revision Z) Halliburton Doc. (MPI Procedure D00976850 Revision E)

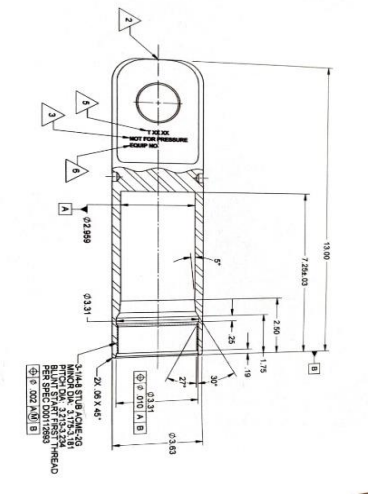

UNIT DESCRIPTION:	**LIFTING CAP (3 1/4 - 6 STUB ACME (3 5/8 DITS)) BOX**
UNIT S/N:	**4516896813-1-1**
LIFTING CAP SWL:	**10000 LBS**

INSPECTION RESULT :

VISUAL , THOROUGH EXAMINATION	unit fully inspected and found free from deforms, cracks, corrosion & mechanical damage
MAGNETIC PARTICLE INSPECTION	Thread & Avaliable critical areas inspected and found free from cracks and other defects
FINAL RESULTS	THE ABOVE INSPECTED AREAS WAS ACCEPTED

COMMENT:

MPI Wet Fluorescent inspection Thread With UltraViolet Light

Magnetic Particle Inspection With A/C Hand Yoke , Black & White Contrast

Online Traceability

EQUIPMENT DETAILS

EQUIPMENT :	AC/DC HAND Yoke	**EQUIPMENT :**	Shooting Coil DC	**EQUIPMENT :**	UV BLACK LIGHT: 3120 µw/cm²
S.NO:	201504052	**S.NO:**	22650	**S.NO:**	87521
Cal Due Date:	07.OCT.2025	**Cal Due Date:**	08.OCT.2025	**Cal Due Date:**	09.OCT.2025

FLUORESCENT 14HF	Magnaflux	**Batch No:**	230503	EXPIRE DATE:	MAY.2026
Whie Contrast Paint Manufacture:	Magnaflux	**Batch No:**	230408	EXPIRE DATE:	APRIL,2026

Digital Lux Meter WHITE LIGHT INTENSITY:	**TECHNICAL DETAILS**		**Black Magnetic Ink Manufacture:7HF**	
3670 Lux/S.NO:2722003	Wet FLUORESCENT Particle Concentration 14 HF	0.1 to 0.4 ml/100 ml	Batch No:230604	
Cal Due Date:09.OCT.2025	Black Magnetic Ink Concentration 7 HF	1.2 to 2.4 ml/100 ml	EXPIRE DATE:	JUNE.2026

PERSON DETAILS

INSPECTOR NAME: M.Shahzad Ahmed	
QUALIFICATION: ASNT LEVEL II MT & PT & VT	
STAMP & SIGNATURE:	Al Takamul Company ADT QUALITY CONTROL For Engineering Services

REVIEW BY

SENIOR INSPECTOR:	MOHAMED ABDALLAH
SUPERVISOR:	HANI ALI
CLIENT:	**ALI Talib HB48903** **Date:** 02-JULY-2025 **Signature** **Haliburton**

Original - Client Files Copy - Area Office QC/FN/MPI/065 Rev.00 DATED 07 NOV 2021

Al TAKAMUL COMPANY FOR ENGINEERING TESTS
AND PROFESSIONAL SAFETY LIMITED
Basra, North Rumaila, Quality Control Yard - Iraq
Tel: +9647810009138 / +9647834964657
Email: OP@qualitycontrol-iraq.com / hany.akafi@qualitycontrol-iraq.com

CERTIFICATE OF THOROUGH EXAMINATION

This Certificate complies with the requirements of the Lifting Equipment Operations and Lifting Equipment Regulations

Date of Examination:	01/07/2025	Date of Report:	01/07/2025	Certificate No:	QC-WPS-25-0102/31
Client Name:	HALLIBURTON	Location:	WPS WORKSHOP	Job Number:	0102

Serial Number:	QTY	Description	SWL	Date of manufacture if known:	Date of last thorough examination
R54	1	**SAFETY PIN BOW SHACKLE** GRADE: 6 SIZE: 7/8'' MANUFACTURE: CROSBY S.F: 6:1	6.5 T	N/A	05/01/2025
Reference Standard:		**BS EN 13889/ HAL DOC: ST-GL-HAL-HSE-0420**			

Is this the first examination after Installation or assembly at a new site or location?	YES		NO	√	Was the examination carried out:			
					Within an interval of 6 months?	YES	√	NO	
					With an interval of 12 months?	YES		NO	√
If the answer to the above question is YES has the equipment been installed correctly?	YES		NO		In accordance with an examination scheme?	YES	√	NO	
					After the occurrence of exceptional circumstances?	YES		NO	√

Identification of any part found to have a defect which is or could not become a danger to persons and a description of the defect: (If none Sate NONE) NONE				
Is the above a defect which is of immediate danger to persons:	YES		NO	√
Is the above a defect which is not yet but could become a danger to persons (If YES state the date by when)	N/A			
Particulars of any repair, renewal or alteration required to remedy the defect identified above:				
Particulars of any tests carried out as part of the examination: (If none state NONE) The subject Items were inspected Visually and dimensionally where no signs of defects were observed at the time of inspection and found satisfactory				
IS THIS EQUIPMENT SAFE TO OPERATE?	YES	√	NO	

Name of Inspector:	Name of person authenticating this report:	Client Signature & Stamp:
ASHRAF ELSAID	MOHAMED ABDALLAH	ALI Talib HB48903 Date: 02-JULY-2025 Signature Haliburton
Date of Next Through Examination:	30/12/2025	

REV: 01 Dated: 20 June 2022

THIS IS TO CERTIFY THAT; a competent person did attend the above-mentioned owner's work location on the date shown above and the equipment described in this report was tested & inspected as per the requirements of Lifting Operations Lifting Equipment Regulation "LOLER". The result was found Satisfactory at the time of Inspection and considered Safe for Lifting.

Al TAKAMUL COMPANY FOR ENGINEERING TESTS
AND PROFESSIONAL SAFETY LIMITED
Basra, North Rumaila, Quality Control Yard - Iraq
Tel: +9647810009138 / +9647834964657
Email: OP@qualitycontrol-iraq.com / hany.akafi@qualitycontrol-iraq.com

CERTIFICATE OF THOROUGH EXAMINATION

This Certificate complies with the requirements of the Lifting Equipment Operations and Lifting Equipment Regulations

Date of Examination:	01/07/2025	Date of Report:	01/07/2025	Certificate No:	QC-WPS-25-0102/32
Client Name:	HALLIBURTON	Location:	WPS WORKSHOP	Job Number:	0102

Serial Number:	QTY	Description	SWL	Date of manufacture if known:	Date of last thorough examination
1725	01	**SAFETY PIN BOW SHACKLE** **Manufacture:** CROSBY **Size: 7/8''** **Grade:** 6 **F.O.S:** 5:1	6 ½" TON	N/A	**05/01/2025**
Reference Standard:		**BS EN 13889 / HAL DOC: WM-GL-HAL-HSE-0420F & WM-GL-HAL-HSE-0420C REV 1**			

Is this the first examination after Installation or assembly at a new site or location?	YES		NO	√	Was the examination carried out: Within an interval of 6 months?	YES	√	NO	
					With an interval of 12 months?	YES		NO	√
If the answer to the above question is YES has the equipment been installed correctly?	YES		NO		In accordance with an examination scheme?	YES	√	NO	
					After the occurrence of exceptional circumstances?	YES		NO	√

Identification of any part found to have a defect which is or could not become a danger to persons and a description of the defect: (If none Sate NONE) NONE				
Is the above a defect which is of immediate danger to persons:	YES		NO	√
Is the above a defect which is not yet but could become a danger to persons (If YES state the date by when)	N/A			
Particulars of any repair, renewal or alteration required to remedy the defect identified above:				
Particulars of any tests carried out as part of the examination: (If none state NONE) The subject Items were inspected Visually and dimensionally where no signs of defects were observed at the time of inspection and found satisfactory				
IS THIS EQUIPMENT SAFE TO OPERATE?	YES	√	NO	

Name of Inspector:	Name of person authenticating this report:	Signature & Stamp:
ASHRAF ELSAID	MOHAMED ABDALLAH	Al Takamul Company LIF QUALITY CONTROL 10 For Engineering Services
Date of Next Through Examination:	30/12/2025	

REV: 01 Dated: 01 NOV 2023

THIS IS TO CERTIFY THAT; a competent person did attend the above-mentioned owner's work location on the date shown above and the equipment described in this report was tested & inspected as per the requirements of Lifting Operations Lifting Equipment Regulation "LOLER". The result was found Satisfactory at the time of Inspection and considered Safe for Lifting.

Al TAKAMUL COMPANY FOR ENGINEERING TESTS
AND PROFESSIONAL SAFETY LIMITED
Basra, North Rumaila, Quality Control Yard - Iraq
Tel: +9647810009138 / +9647834964657
Email: OP@qualitycontrol-iraq.com / hany.akafi@qualitycontrol-iraq.com

CERTIFICATE OF THOROUGH EXAMINATION

This Certificate complies with the requirements of the Lifting Equipment Operations and Lifting Equipment Regulations

Date of Examination:	01/07/2025	Date of Report:	01/07/2025	Certificate No:	QC-WPS-25-0102/33
Client Name:	HALLIBURTON	Location:	WPS WORKSHOP	Job Number:	0102

Serial Number:	QTY	Description	SWL	Date of manufacture if known:	Date of last thorough examination
BLP-201976-32	1	**SAFETY PIN BOW SHACKLE** GRADE: 8 SIZE: 1 1/8'' MANUFACTURE: SKOOKUM S.F: 6:1	18 T	N/A	05/01/2025
Reference Standard:		ISO 2415/ HAL DOC: ST-GL-HAL-HSE-0420			

Is this the first examination after Installation or assembly at a new site or location?	YES		NO	√	Was the examination carried out: Within an interval of 6 months?	YES	√	NO	
					With an interval of 12 months?	YES		NO	√
If the answer to the above question is YES has the equipment been installed correctly?	YES		NO		In accordance with an examination scheme?	YES	√	NO	
					After the occurrence of exceptional circumstances?	YES		NO	√

Identification of any part found to have a defect which is or could not become a danger to persons and a description of the defect: (If none Sate NONE) NONE				
Is the above a defect which is of immediate danger to persons:	YES		NO	√
Is the above a defect which is not yet but could become a danger to persons (If YES state the date by when)	N/A			
Particulars of any repair, renewal or alteration required to remedy the defect identified above:				
Particulars of any tests carried out as part of the examination: (If none state NONE) The subject Items were inspected Visually and dimensionally where no signs of defects were observed at the time of inspection and found satisfactory				
IS THIS EQUIPMENT SAFE TO OPERATE?	YES	√	NO	

Name of Inspector:	Name of person authenticating this report:	Client Signature & Stamp:
ASHRAF ELSAID	MOHAMED ABDALLAH	ALi Talib HB48903 Date: 02-JULY-2025 Signature Haliburton
Date of Next Through Examination:	30/12/2025	

REV: 01 Dated: 20 June 2022

THIS IS TO CERTIFY THAT; a competent person did attend the above-mentioned owner's work location on the date shown above and the equipment described in this report was tested & inspected as per the requirements of Lifting Operations Lifting Equipment Regulation "LOLER". The result was found Satisfactory at the time of inspection and considered Safe for Lifting.

Al TAKAMUL COMPANY FOR ENGINEERING TESTS
AND PROFESSIONAL SAFETY LIMITED
Basra, North Rumaila, Quality Control Yard - Iraq
Tel: +9647810009138 / +9647834964657
Email: OP@qualitycontrol-iraq.com / hany.akafi@qualitycontrol-iraq.com

CERTIFICATE OF THOROUGH EXAMINATION

This Certificate complies with the requirements of the Lifting Equipment Operations and Lifting Equipment Regulations

Date of Examination:	01/07/2025	Date of Report:	01/07/2025	Certificate No:	QC-WPS-25-0102/34
Client Name:	HALLIBURTON	Location:	WPS WORKSHOP	Job Number:	0102

Serial Number:	QTY	Description	SWL	Date of manufacture if known:	Date of last thorough examination
HST-066638-003	1	SAFETY PIN BOW SHACKLE GRADE: 8 SIZE: 1 1/8'' MANUFACTURE: SKOOKUM S.F: 6:1	18 T	N/A	05/01/2025
Reference Standard:		ISO 2415 /HAL DOC: ST-GL-HAL-HSE-0420			

Is this the first examination after Installation or assembly at a new site or location?	YES		NO	√	Was the examination carried out: Within an interval of 6 months?	YES	√	NO	
					With an interval of 12 months?	YES		NO	√
If the answer to the above question is YES has the equipment been installed correctly?	YES		NO		In accordance with an examination scheme?	YES	√	NO	
					After the occurrence of exceptional circumstances?	YES		NO	√

Identification of any part found to have a defect which is or could not become a danger to persons and a description of the defect: (If none Sate NONE) NONE

Is the above a defect which is of immediate danger to persons:	YES		NO	√
Is the above a defect which is not yet but could become a danger to persons (If YES state the date by when)	N/A			

Particulars of any repair, renewal or alteration required to remedy the defect identified above:

Particulars of any tests carried out as part of the examination: (If none state NONE)
The subject Items were inspected Visually and dimensionally where no signs of defects were observed at the time of inspection and found satisfactory

IS THIS EQUIPMENT SAFE TO OPERATE?	YES	√	NO	

Name of Inspector:	Name of person authenticating this report:	Client Signature & Stamp:
ASHRAF ELSAID	MOHAMED ABDALLAH	ALi Talib HB48903 Date: 02-JULY-2025 Signature Haliburton
Date of Next Through Examination:	30/12/2025	

REV: 01 Dated: 20 June 2022

THIS IS TO CERTIFY THAT; a competent person attend the above-mentioned owner's work location on the date shown above and the equipment described in this report was tested & inspected as per the requirements of Lifting Operations Lifting Equipment Regulation "LOLER". The result was found Satisfactory at the time of Inspection and considered Safe for Lifting.

Al TAKAMUL COMPANY FOR ENGINEERING TESTS
AND PROFESSIONAL SAFETY LIMITED
Basra, North Rumaila, Quality Control Yard - Iraq
Tel: +9647810009138 / +9647834964657
Email: OP@qualitycontrol-iraq.com / hany.akafi@qualitycontrol-iraq.com

CERTIFICATE OF THOROUGH EXAMINATION

This Certificate complies with the requirements of the Lifting Equipment Operations and Lifting Equipment Regulations

Date of Examination:	01/07/2025	Date of Report:	01/07/2025	Certificate No:	QC-WPS-25-0102/35
Client Name:	HALLIBURTON	Location:	WPS WORKSHOP	Job Number:	0102

Serial Number:	QTY	Description	SWL	Date of manufacture if known:	Date of last thorough examination
A414	1	SAFETY PIN BOW SHACKLE GRADE: 6 SIZE: 7/8'' MANUFACTURE: HW S.F: 6:1	6.5 T	N/A	05/01/2025
Reference Standard:		BS EN 13889 /HAL DOC: ST-GL-HAL-HSE-0420			

Is this the first examination after Installation or assembly at a new site or location?	YES		NO	√	Was the examination carried out:			
					Within an interval of 6 months?	YES	√	NO	
					With an interval of 12 months?	YES		NO	√
If the answer to the above question is YES has the equipment been installed correctly?	YES		NO		In accordance with an examination scheme?	YES	√	NO	
					After the occurrence of exceptional circumstances?	YES		NO	√

Identification of any part found to have a defect which is or could not become a danger to persons and a description of the defect: (If none Sate NONE) NONE				
Is the above a defect which is of immediate danger to persons:	YES		NO	√
Is the above a defect which is not yet but could become a danger to persons (If YES state the date by when)	N/A			
Particulars of any repair, renewal or alteration required to remedy the defect identified above:				
Particulars of any tests carried out as part of the examination: (If none state NONE) The subject Items were inspected Visually and dimensionally where no signs of defects were observed at the time of inspection and found satisfactory				
IS THIS EQUIPMENT SAFE TO OPERATE?	YES	√	NO	

Name of Inspector:	Name of person authenticating this report:	Client Signature & Stamp:
ASHRAF ELSAID	MOHAMED ABDALLAH	ALi Talib HB48903 Date: 02-JULY-2025 Signature Haliburton
Date of Next Through Examination:	30/12/2025	

REV: 01 Dated: 20 June 2022

THIS IS TO CERTIFY THAT; a competent person attend the above-mentioned owner's work location on the date shown above and the equipment described in this report was tested & inspected as per the requirements of Lifting Operations Lifting Equipment Regulation "LOLER". The result was found Satisfactory at the time of Inspection and considered Safe for Lifting.

Al TAKAMUL COMPANY FOR ENGINEERING TESTS
AND PROFESSIONAL SAFETY LIMITED
Basra, North Rumaila, Quality Control Yard - Iraq
Tel: +9647810009138 / +9647834964657
Email: OP@qualitycontrol-iraq.com / hany.akafi@qualitycontrol-iraq.com

CERTIFICATE OF THOROUGH EXAMINATION

This Certificate complies with the requirements of the Lifting Equipment Operations and Lifting Equipment Regulations

Date of Examination:	01/07/2025	Date of Report:	01/07/2025	Certificate No:	QC-WPS-25-0102/36
Client Name:	HALLIBURTON	Location:	WPS WORKSHOP	Job Number:	0102

Serial Number:	QTY	Description	SWL	Date of manufacture if known:	Date of last thorough examination
BLP-179741-01	1	**SINGLE LEG CHAIN SLING** **C/W MASTER LINK AT THE TOP & GRAB HOOK AT THE END** **MANUFACTURER:** BISHOP LIFTING PRODCUTS **DIMENSION:** 1/2" DIA X 20 FT (L) **FOS:** 4:1	15,000 LBS	N/A	05/01/2025
Reference Standard:	**BS EN 818-4/ HAL DOC: ST-GL-HAL-HSE-0420**				

Is this the first examination after Installation or assembly at a new site or location?	YES		NO	√	Was the examination carried out: Within an interval of 6 months?	YES	√	NO	
					With an interval of 12 months?	YES		NO	√
If the answer to the above question is YES has the equipment been installed correctly?	YES		NO		In accordance with an examination scheme?	YES	√	NO	
					After the occurrence of exceptional circumstances?	YES		NO	√

Identification of any part found to have a defect which is or could not become a danger to persons and a description of the defect: (If none Sate NONE) NONE				
Is the above a defect which is of immediate danger to persons:	YES		NO	√
Is the above a defect which is not yet but could become a danger to persons (If YES state the date by when)	N/A			
Particulars of any repair, renewal or alteration required to remedy the defect identified above:				
Particulars of any tests carried out as part of the examination: (If none state NONE) The subject Items were inspected Visually and dimensionally where no signs of defects were observed at the time of inspection and found satisfactory				
IS THIS EQUIPMENT SAFE TO OPERATE?	YES	√	NO	

Name of Inspector:	Name of person authenticating this report:	Client Signature & Stamp:
ASHRAF ELSAID	MOHAMED ABDALLAH	ALi Talib HB48903 Date: 02-JULY-2025 Signature Haliburton
Date of Next Through Examination:	30/12/2025	

REV: 01 Dated: 20 June 2022

THIS IS TO CERTIFY THAT; a competent person did attend the above-mentioned owner's work location on the date shown above and the equipment described in this report was tested & inspected as per the requirements of Lifting Operations Lifting Equipment Regulation "LOLER". The result was found Satisfactory at the time of Inspection and considered Safe for Lifting.

Al TAKAMUL COMPANY FOR ENGINEERING TESTS
AND PROFESSIONAL SAFETY LIMITED
Basra, North Rumaila, Quality Control Yard - Iraq
Tel: +9647810009138 / +9647834964657
Email: OP@qualitycontrol-iraq.com / hany.akafi@qualitycontrol-iraq.com

CERTIFICATE OF THOROUGH EXAMINATION

This Certificate complies with the requirements of the Lifting Equipment Operations and Lifting Equipment Regulations

Date of Examination:	01/07/2025	Date of Report:	01/07/2025	Certificate No:	QC-WPS-25-0102/37
Client Name:	HALLIBURTON	Location:	WPS WORKSHOP	Job Number:	0102

Serial Number:	QTY	Description	SWL	Date of manufacture if known:	Date of last thorough examination
CS22	1	**SINGLE LEG CHAIN SLING** **C/W MASTER LINK AT THE TOP & GRAB HOOK AT THE END** **MANUFACTURER:** BISHOP LIFTING PRODCUTS **DIMENSION:** 1/2" DIA X 10 FT (L) **FOS:** 4:1	15000 LBS	N/A	05/01/2025
Reference Standard:	**BS EN 818-4/ HAL DOC: ST-GL-HAL-HSE-0420**				

Is this the first examination after Installation or assembly at a new site or location?	YES		NO	√	Was the examination carried out: Within an interval of 6 months?	YES	√	NO	
					With an interval of 12 months?	YES		NO	√
If the answer to the above question is YES has the equipment been installed correctly?	YES		NO		In accordance with an examination scheme?	YES	√	NO	
					After the occurrence of exceptional circumstances?	YES		NO	√

Identification of any part found to have a defect which is or could not become a danger to persons and a description of the defect: (If none Sate NONE) NONE				
Is the above a defect which is of immediate danger to persons:	YES		NO	√
Is the above a defect which is not yet but could become a danger to persons (If YES state the date by when)	N/A			
Particulars of any repair, renewal or alteration required to remedy the defect identified above:				
Particulars of any tests carried out as part of the examination: (If none state NONE) The subject Items were inspected Visually and dimensionally where no signs of defects were observed at the time of inspection and found satisfactory				
IS THIS EQUIPMENT SAFE TO OPERATE?	YES	√	NO	

Name of Inspector:	Name of person authenticating this report:	Client Signature & Stamp:
ASHRAF ELSAID	MOHAMED ABDALLAH	ALi Talib HB48903 Date: 02-JULY-2025 Signature Haliburton
Date of Next Through Examination:	30/12/2025	

REV: 01 Dated: 20 June 2022

THIS IS TO CERTIFY THAT; a competent person did attend the above-mentioned owner's work location on the date shown above and the equipment described in this report was tested & inspected as per the requirements of Lifting Operations Lifting Equipment Regulation "LOLER". The result was found Satisfactory at the time of Inspection and considered Safe for Lifting.

Al TAKAMUL COMPANY FOR ENGINEERING TESTS
AND PROFESSIONAL SAFETY LIMITED
Basra, North Rumaila, Quality Control Yard - Iraq
Tel: +9647810009138 / +9647834964657
Email: OP@qualitycontrol-iraq.com / hany.akafi@qualitycontrol-iraq.com

CERTIFICATE OF THOROUGH EXAMINATION

This Certificate complies with the requirements of the Lifting Equipment Operations and Lifting Equipment Regulations

Date of Examination:	01/07/2025	Date of Report:	01/07/2025	Certificate No:	QC-WPS-25-0102/38
Client Name:	HALLIBURTON	Location:	WPS WORKSHOP	Job Number:	0102

Serial Number:	QTY	Description	SWL	Date of manufacture if known:	Date of last thorough examination
41819020	1	**Sheave Wheel Assembly 17"** WIRELINE SIZE: 5/16'' WEIGHT: 100 LBS S.F: 4:1	6 T	N/A	05/01/2025
Reference Standard:		HAL DOC: ST-GL-HAL-HSE-0420			

Is this first examination after Installation or assembly at a new site or location?	YES		NO	√	Was the examination carried out:			
					Within an interval of 6 months?	YES	√	NO	
					With an interval of 12 months?	YES		NO	√
If the answer to the above question is YES has the equipment been installed correctly?	YES	√	NO		In accordance with an examination scheme?	YES	√	NO	
					After the occurrence of exceptional circumstances?	YES		NO	√

Identification of any part found to have a defect which is or could not become a danger to persons and a description of the defect: (If none Sate NONE) NONE				
Is the above a defect which is of immediate danger to persons:	YES		NO	√
Is the above a defect which is not yet but could become a danger to persons (If YES state the date by when)	N/A			
Particulars of any repair, renewal or alteration required to remedy the defect identified above:				
Particulars of any tests carried out as part of the examination: (If none state NONE) The subject Items were inspected Visually and dimensionally where no signs of defects were observed at the time of inspection and found satisfactory				
IS THIS EQUIPMENT SAFE TO OPERATE?	YES	√	NO	

Name of Inspector:	Name of person authenticating this report:	Client Signature & Stamp:
ASHRAF ELSAID	MOHAMED ABDALLAH	ALi Talib HB48903 Date: 02-JULY-2025 Signature Haliburton
Date of Next Through Examination:	30/12/2025	

REV: 01 Dated: 20 June 2022

THIS IS TO CERTIFY THAT; a competent person did attend the above-mentioned owner's work location on the date shown above and the equipment described in this report was tested & inspected as per the requirements of Lifting Operations Lifting Equipment Regulation "LOLER". The result was found Satisfactory at the time of Inspection and considered Safe for Lifting.

Al TAKAMUL COMPANY FOR ENGINEERING TESTS
AND PROFESSIONAL SAFETY LIMITED
Basra, North Rumaila, Quality Control Yard - Iraq
Tel: +9647810009138 / +9647834964657
Email: OP@qualitycontrol-iraq.com / hany.akafi@qualitycontrol-iraq.com

CERTIFICATE OF THOROUGH EXAMINATION

This Certificate complies with the requirements of the Lifting Equipment Operations and Lifting Equipment Regulations

Date of Examination:	01/07/2025	Date of Report:	01/07/2025	Certificate No:	QC-WPS-25-0102/39
Client Name:	HALLIBURTON	Location:	WPS WORKSHOP	Job Number:	0102

Serial Number:	QTY	Description	SWL	Date of manufacture if known:	Date of last thorough examination
2111212	1	**SINGLE LEG CHAIN SLING** **C/W MASTER LINK AT THE TOP & GRAB HOOK AT THE END** **MANUFACTURER:** BISHOP LIFTING PRODCUTS **DIM:** 1/2" DIA X 10 FT (L) **FOS:** 4:1	15,000 LBS	N/A	05/01/2025
Reference Standard:		BS EN 818-4/ HAL DOC: ST-GL-HAL-HSE-0420			

Is this the first examination after Installation or assembly at a new site or location?	YES		NO	√	Was the examination carried out: Within an interval of 6 months?	YES	√	NO	
					With an interval of 12 months?	YES		NO	√
If the answer to the above question is YES has the equipment been installed correctly?	YES		NO		In accordance with an examination scheme?	YES	√	NO	
					After the occurrence of exceptional circumstances?	YES		NO	√

Identification of any part found to have a defect which is or could not become a danger to persons and a description of the defect: (If none Sate NONE) NONE				
Is the above a defect which is of immediate danger to persons:	YES		NO	√
Is the above a defect which is not yet but could become a danger to persons (If YES state the date by when)	N/A			
Particulars of any repair, renewal or alteration required to remedy the defect identified above:				
Particulars of any tests carried out as part of the examination: (If none state NONE) The subject Items were inspected Visually and dimensionally where no signs of defects were observed at the time of inspection and found satisfactory				
IS THIS EQUIPMENT SAFE TO OPERATE?	YES	√	NO	

Name of Inspector:	Name of person authenticating this report:	Client Signature & Stamp:
ASHRAF ELSAID	MOHAMED ABDALLAH	ALi Talib HB48903 Date: 02-JULY-2025 Signature Haliburton
Date of Next Through Examination:	30/12/2025	

REV: 01 Dated: 20 June 2022

THIS IS TO CERTIFY THAT; a competent person did attend the above-mentioned owner's work location on the date shown above and the equipment described in this report was tested & inspected as per the requirements of Lifting Operations Lifting Equipment Regulation "LOLER". The result was found Satisfactory at the time of Inspection and considered Safe for Lifting.

Al TAKAMUL COMPANY FOR ENGINEERING TESTS
AND PROFESSIONAL SAFETY LIMITED
Basra, North Rumaila, Quality Control Yard - Iraq
Tel: +9647810009138 / +9647834964657
Email: OP@qualitycontrol-iraq.com / hany.akafi@qualitycontrol-iraq.com

CERTIFICATE OF THOROUGH EXAMINATION

This Certificate complies with the requirements of the Lifting Equipment Operations and Lifting Equipment Regulations

Date of Examination:	01/07/2025	Date of Report:	01/07/2025	Certificate No:	QC-WPS-25-0102/40
Client Name:	HALLIBURTON	Location:	WPS WORKSHOP	Job Number:	0102

Serial Number:	QTY	Description	SWL	Date of Manufacture if known:	Date of last thorough examination
01155479	1	**17" SHEAVE WHEEL ASSEMBLY** **Part NO: 8016535** **Wire Line Size: 5/16"** **Weight: 100 lbs** **S.F: 4:1**	6 T	N/A	05/01/2025
Reference Standard:		**HAL DOC: ST-GL-HAL-HSE-0420**			

Is this the first examination after Installation or assembly at a new site or location?	YES		NO	√	Was the examination carried out:			
					Within an interval of 6 months?	YES	√	NO	
					With an interval of 12 months?	YES		NO	√
If the answer to the above question is YES has the equipment been installed correctly?	YES	√	NO		In accordance with an examination scheme?	YES	√	NO	
					After the occurrence of exceptional circumstances?	YES		NO	√

Identification of any part found to have a defect which is or could not become a danger to persons and a description of the defect: (If none Sate NONE) NONE				
Is the above a defect which is of immediate danger to persons:	YES		NO	√
Is the above a defect which is not yet but could become a danger to persons (If YES state the date by when)	N/A			
Particulars of any repair, renewal or alteration required to remedy the defect identified above:				
Particulars of any tests carried out as part of the examination: (If none state NONE) The subject Items were inspected Visually and dimensionally where no signs of defects were observed at the time of inspection and found satisfactory				
IS THIS EQUIPMENT SAFE TO OPERATE?	YES	√	NO	

Name of Inspector:	Name of person authenticating this report:	Client Signature & Stamp:
ASHRAF ELSAID	MOHAMED ABDALLAH	ALi Talib HB48903 Date: 02-JULY-2025 Signature Haliburton
Date of Next Through Examination:	30/12/2025	

REV: 01 Dated: 20 June 2022

THIS IS TO CERTIFY THAT; a competent person did attend the above-mentioned owner's work location on the date shown above and the equipment described in this report was tested & inspected as per the requirements of Lifting Operations Lifting Equipment Regulation "LOLER". The result was found Satisfactory at the time of Inspection and considered Safe for Lifting.

Al TAKAMUL COMPANY FOR ENGINEERING TESTS
AND PROFESSIONAL SAFETY LIMITED
Basra, North Rumaila, Quality Control Yard - Iraq
Tel: +9647810009138 / +9647834964657
Email: OP@qualitycontrol-iraq.com / hany.akafi@qualitycontrol-iraq.com

CERTIFICATE OF THOROUGH EXAMINATION

This Certificate complies with the requirements of the Lifting Equipment Operations and Lifting Equipment Regulations

Date of Examination:	01/07/2025	Date of Report:	01/07/2025	Certificate No:	QC-WPS-25-0102/41
Client Name:	HALLIBURTON	Location:	WPS WORKSHOP	Job Number:	0102

Serial Number:	QTY	Description	SWL	Date of manufacture if known:	Date of last thorough examination
SS	1	**SUPPORT PIN** **SIZE:** 31 MM **FOS:** 4:1	50,000 LBS	N/A	05/01/2025
Reference Standard:		HAL DOC: ST-GL-HAL-HSE-0420			

Is this the first examination after Installation or assembly at a new site or location?	YES		NO	√	Was the examination carried out:				
					Within an interval of 6 months?	YES	√	NO	
					With an interval of 12 months?	YES		NO	√
If the answer to the above question is YES has the equipment been installed correctly?	YES		NO		In accordance with an examination scheme?	YES	√	NO	
					After the occurrence of exceptional circumstances?	YES		NO	√

Identification of any part found to have a defect which is or could not become a danger to persons and a description of the defect: (If none Sate NONE) NONE				
Is the above a defect which is of immediate danger to persons:	YES		NO	√
Is the above a defect which is not yet but could become a danger to persons (If YES state the date by when)	N/A			
Particulars of any repair, renewal or alteration required to remedy the defect identified above:				
Particulars of any tests carried out as part of the examination: (If none state NONE) The subject Items were inspected Visually and dimensionally where no signs of defects were observed at the time of inspection and found satisfactory				
IS THIS EQUIPMENT SAFE TO OPERATE?	YES	√	NO	

Name of Inspector:	Name of person authenticating this report:	Client Signature & Stamp:
ASHRAF ELSAID	MOHAMED ABDALLAH	ALi Talib HB48903 Date: 02-JULY-2025 Signature Haliburton
Date of Next Through Examination:	30/12/2025	

REV: 01 Dated: 20 June 2022

THIS IS TO CERTIFY THAT; a competent person did attend the above-mentioned owner's work location on the date shown above and the equipment described in this report was tested & inspected as per the requirements of Lifting Operations Lifting Equipment Regulation "LOLER". The result was found Satisfactory at the time of Inspection and considered Safe for Lifting.

Al TAKAMUL COMPANY FOR ENGINEERING TESTS
AND PROFESSIONAL SAFETY LIMITED
Basra, North Rumaila, Quality Control Yard - Iraq
Tel: +9647810009138 / +9647834964657
Email: OP@qualitycontrol-iraq.com / hany.akafi@qualitycontrol-iraq.com

CERTIFICATE OF THOROUGH EXAMINATION

This Certificate complies with the requirements of the Lifting Equipment Operations and Lifting Equipment Regulations

Date of Examination:	**01/07/2025**	**Date of Report:**	**01/07/2025**	**Certificate No:**	**QC-WPS-25-0102/42**
Client Name:	**HALLIBURTON**	**Location:**	**WPS WORKSHOP**	**Job Number:**	**0102**

Serial Number:	QTY	Description	SWL	Date of manufacture if known:	Date of last thorough examination
T10	1	**SUPPORT PIN** **SIZE:** 31 MM **FOS:** 4:1	50,000 LBS	N/A	05/01/2025
Reference Standard:		**HAL DOC: ST-GL-HAL-HSE-0420**			

Is this the first examination after Installation or assembly at a new site or location?	YES		NO	√	Was the examination carried out: Within an interval of 6 months?	YES	√	NO	
					With an interval of 12 months?	YES		NO	√
If the answer to the above question is YES has the equipment been installed correctly?	YES		NO		In accordance with an examination scheme?	YES	√	NO	
					After the occurrence of exceptional circumstances?	YES		NO	√

Identification of any part found to have a defect which is or could not become a danger to persons and a description of the defect: (If none Sate NONE) NONE				
Is the above a defect which is of immediate danger to persons:	YES		NO	√
Is the above a defect which is not yet but could become a danger to persons (If YES state the date by when)	N/A			
Particulars of any repair, renewal or alteration required to remedy the defect identified above:				
Particulars of any tests carried out as part of the examination: (If none state NONE) The subject Items were inspected Visually and dimensionally where no signs of defects were observed at the time of inspection and found satisfactory				
IS THIS EQUIPMENT SAFE TO OPERATE?	YES	√	NO	

Name of Inspector:	Name of person authenticating this report:	Client Signature & Stamp:
ASHRAF ELSAID	**MOHAMED ABDALLAH**	**ALi Talib HB48903** **Date:** 02-JULY-2025 **Signature** **Haliburton**
Date of Next Through Examination:	**30/12/2025**	

REV: 01 Dated: 20 June 2022

THIS IS TO CERTIFY THAT; a competent person did attend the above-mentioned owner's work location on the date shown above and the equipment described in this report was tested & inspected as per the requirements of Lifting Operations Lifting Equipment Regulation "LOLER". The result was found Satisfactory at the time of Inspection and considered Safe for Lifting.

Al TAKAMUL COMPANY FOR ENGINEERING TESTS
AND PROFESSIONAL SAFETY LIMITED
Basra, North Rumaila, Quality Control Yard - Iraq
Tel: +9647810009138 / +9647834964657
Email: OP@qualitycontrol-iraq.com / hany.akafi@qualitycontrol-iraq.com

CERTIFICATE OF THOROUGH EXAMINATION

This Certificate complies with the requirements of the Lifting Equipment Operations and Lifting Equipment Regulations

Date of Examination:	01/07/2025	Date of Report:	01/07/2025	Certificate No:	QC-WPS-25-0102/43
Client Name:	HALLIBURTON	Location:	WPS WORKSHOP	Job Number:	0102

Serial Number:	QTY	Description	SWL	Date of manufacture if known:	Date of last thorough examination
R2	1	**SUPPORT PIN** **SIZE:** 31 MM **FOS:** 4:1	50,000 LBS	N/A	05/01/2025
Reference Standard:		HAL DOC: ST-GL-HAL-HSE-0420			

Is this the first examination after Installation or assembly at a new site or location?	YES		NO	√	Was the examination carried out:				
					Within an interval of 6 months?	YES	√	NO	
					With an interval of 12 months?	YES		NO	√
If the answer to the above question is YES has the equipment been installed correctly?	YES		NO		In accordance with an examination scheme?	YES	√	NO	
					After the occurrence of exceptional circumstances?	YES		NO	√

Identification of any part found to have a defect which is or could not become a danger to persons and a description of the defect: (If none Sate NONE) NONE				
Is the above a defect which is of immediate danger to persons:	YES		NO	√
Is the above a defect which is not yet but could become a danger to persons (If YES state the date by when)	N/A			
Particulars of any repair, renewal or alteration required to remedy the defect identified above:				
Particulars of any tests carried out as part of the examination: (If none state NONE) The subject Items were inspected Visually and dimensionally where no signs of defects were observed at the time of inspection and found satisfactory				
IS THIS EQUIPMENT SAFE TO OPERATE?	YES	√	NO	

Name of Inspector:	Name of person authenticating this report:	Client Signature & Stamp:
ASHRAF ELSAID	MOHAMED ABDALLAH	ALi Talib HB48903 Date: 02-JULY-2025 Signature Haliburton
Date of Next Through Examination:	30/12/2025	

REV: 01 Dated: 20 June 2022

THIS IS TO CERTIFY THAT; a competent person did attend the above-mentioned owner's work location on the date shown above and the equipment described in this report was tested & inspected as per the requirements of Lifting Operations Lifting Equipment Regulation "LOLER". The result was found Satisfactory at the time of Inspection and considered Safe for Lifting.

CERTIFICATE OF THOROUGH EXAMINATION

This Certificate complies with the requirements of the Lifting Equipment Operations and Lifting Equipment Regulations

Date of Examination:	**01/07/2025**	**Date of Report:**	**01/07/2025**	**Certificate No:**	**QC-WPS-25-0102/44**
Client Name:	**HALLIBURTON**	**Location:**	**WPS WORKSHOP**	**Job Number:**	**0102**

Serial Number:	QTY	Description	SWL	Date of manufacture if known:	Date of last thorough examination
E1381	**01**	**SAFETY PIN BOW SHACKLE** **SIZE: 1/2"** **GRADE: 6** **MANUFACTURE: CROSBY**	**2 T**	**N/A**	**05/01/2025**
Reference Standard:	**BS 13889 / US FED SPEC RR-C-271D / HAL DOC: ST-GL-HAL-HSE-0420**				

Is this the first examination after Installation or assembly at a new site or location?	YES		NO	√	Was the examination carried out?			
					Within an interval of 6 months?	YES	√	NO	
					With an interval of 12 months?	YES		NO	√
If the answer to the above question is YES has the equipment been installed correctly?	YES	√	NO		In accordance with an examination scheme?	YES	√	NO	
					After the occurrence of exceptional circumstances?	YES		NO	√

Identification of any part found to have a defect which is or could not become a danger to persons and a description of the defect: (If none Sate NONE) NONE				
Is the above a defect which is of immediate danger to persons:	YES		NO	√
Is the above a defect which is not yet but could become a danger to persons (If YES state the date by when)	YES by:			
Particulars of any repair, renewal or alteration required to remedy the defect identified above:				
Particulars of any tests carried out as part of the examination: (If none state NONE) The subject Items were inspected Visually and dimensionally where no signs of defects were observed at the time of inspection and found satisfactory				
IS THIS EQUIPMENT SAFE TO OPERATE?	YES	√	NO	

Name of Inspector:	**Name of person authenticating this report:**
Mohamed Abdullah	**Ashraf El said**
Signature:	**Signature:**

Latest date by which next thorough examination must be carried out:	**30/12/2025**

REV: 00 Dated: 30 May 2021

THIS IS TO CERTIFY THAT; a competent person did attend the above-mentioned owner's work location on the date shown above and the equipment described in this report was tested & inspected as per the requirements of Lifting Operations Lifting Equipment Regulation "LOLER". The result was found Satisfactory at the time of Inspection and considered Safe for Lifting.

Al TAKAMUL COMPANY FOR ENGINEERING TESTS
AND PROFESSIONAL SAFETY LIMITED
Basra, North Rumaila, Quality Control Yard - Iraq
Tel: +9647810009138 / +9647834964657
Email: OP@qualitycontrol-iraq.com / hany.akafi@qualitycontrol-iraq.com

CERTIFICATE OF THOROUGH EXAMINATION

This Certificate complies with the requirements of the Lifting Equipment Operations and Lifting Equipment Regulations

Date of Examination:	01/07/2025	Date of Report:	01/07/2025	Certificate No:	QC-WPS-25-0102/45
Client Name:	HALLIBURTON	Location:	WPS WORKSHOP	Job Number:	0102

Serial Number:	QTY	Description	SWL	Date of Manufacture if known:	Date of last thorough examination
MS7	1	**SUPPORT PIN** **SIZE:** 24 MM **FOS:** 4:1	35,000 LBS	N/A	05/01/2025
Reference Standard:		**HAL DOC: ST-GL-HAL-HSE-0420**			

Is this the first examination after Installation or assembly at a new site or location?	YES		NO	√	Was the examination carried out:			
					Within an interval of 6 months?	YES	√	NO	
					With an interval of 12 months?	YES		NO	√
If the answer to the above question is YES has the equipment been installed correctly?	YES	√	NO		In accordance with an examination scheme?	YES	√	NO	
					After the occurrence of exceptional circumstances?	YES		NO	√

Identification of any part found to have a defect which is or could not become a danger to persons and a description of the defect: (If none Sate NONE) NONE				
Is the above a defect which is of immediate danger to persons:	YES		NO	√
Is the above a defect which is not yet but could become a danger to persons (If YES state the date by when)	N/A			
Particulars of any repair, renewal or alteration required to remedy the defect identified above:				
Particulars of any tests carried out as part of the examination: (If none state NONE) The subject Items were inspected Visually and dimensionally where no signs of defects were observed at the time of inspection and found satisfactory				
IS THIS EQUIPMENT SAFE TO OPERATE?	YES	√	NO	

Name of Inspector:	Name of person authenticating this report:	Client Signature & Stamp:
ASHRAF ELSAID	MOHAMED ABDALLAH	ALi Talib HB48903 Date: 02-JULY-2025 Signature Haliburton
Date of Next Through Examination:	30/12/2025	

REV: 01 Dated: 20 June 2022

THIS IS TO CERTIFY THAT; a competent person did attend the above-mentioned owner's work location on the date shown above and the equipment described in this report was tested & inspected as per the requirements of Lifting Operations Lifting Equipment Regulation "LOLER". The result was found Satisfactory at the time of Inspection and considered Safe for Lifting.

Al TAKAMUL COMPANY FOR ENGINEERING TESTS
AND PROFESSIONAL SAFETY LIMITED
Basra, North Rumaila, Quality Control Yard - Iraq
Tel: +9647810009138 / +9647834964657
Email: OP@qualitycontrol-iraq.com / hany.akafi@qualitycontrol-iraq.com

CERTIFICATE OF THOROUGH EXAMINATION

This Certificate complies with the requirements of the Lifting Equipment Operations and Lifting Equipment Regulations

Date of Examination:	01/07/2025	Date of Report:	01/07/2025	Certificate No:	QC-WPS-25-0102/46
Client Name:	HALLIBURTON	Location:	WPS WORKSHOP	Job Number:	0102

Serial Number:	QTY	Description	SWL	Date of manufacture if known:	Date of last thorough examination
2N	1	**SUPPORT PIN** SIZE: 24 MM DIA FOS: 4:1	35.000 LBS	N/A	05/01/2025
Reference Standard:		**HAL DOC: ST-GL-HAL-HSE-0420**			

Is this the first examination after Installation or assembly at a new site or location?	YES		NO	√	Was the examination carried out:				
					Within an interval of 6 months?	YES	√	NO	
					With an interval of 12 months?	YES		NO	√
If the answer to the above question is YES has the equipment been installed correctly?	YES		NO		In accordance with an examination scheme?	YES	√	NO	
					After the occurrence of exceptional circumstances?	YES		NO	√

Identification of any part found to have a defect which is or could not become a danger to persons and a description of the defect: (If none Sate NONE) NONE				
Is the above a defect which is of immediate danger to persons:	YES		NO	√
Is the above a defect which is not yet but could become a danger to persons (If YES state the date by when)	N/A			
Particulars of any repair, renewal or alteration required to remedy the defect identified above:				
Particulars of any tests carried out as part of the examination: (If none state NONE) The subject Items were inspected Visually and dimensionally where no signs of defects were observed at the time of inspection and found satisfactory				
IS THIS EQUIPMENT SAFE TO OPERATE?	YES	√	NO	

Name of Inspector:	Name of person authenticating this report:	Client Signature & Stamp:
ASHRAF ELSAID	MOHAMED ABDALLAH	ALi Talib HB48903 Date: 02-JULY-2025 Signature Haliburton
Date of Next Through Examination:	30/12/2025	

REV: 01 Dated: 20 June 2022

THIS IS TO CERTIFY THAT; a competent person did attend the above-mentioned owner's work location on the date shown above and the equipment described in this report was tested & inspected as per the requirements of Lifting Operations Lifting Equipment Regulation "LOLER". The result was found Satisfactory at the time of Inspection and considered Safe for Lifting.

Al TAKAMUL COMPANY FOR ENGINEERING TESTS
AND PROFESSIONAL SAFETY LIMITED
Basra, North Rumaila, Quality Control Yard - Iraq
Tel: +9647810009138 / +9647834964657
Email: OP@qualitycontrol-iraq.com / hany.akafi@qualitycontrol-iraq.com

CERTIFICATE OF THOROUGH EXAMINATION

This Certificate complies with the requirements of the Lifting Equipment Operations and Lifting Equipment Regulations

Date of Examination:	01/07/2025	Date of Report:	01/07/2025	Certificate No:	QC-WPS-25-0102/47
Client Name:	HALLIBURTON	Location:	WPS WORKSHOP	Job Number:	0102

Serial Number:	QTY	Description	SWL	Date of manufacture if known:	Date of last thorough examination
H4186	1	**SAFETY PIN BOW SHACKLE** GRADE: 6 SIZE: 1/2'' MANUFACTURE: CROSBY S.F: 6:1	2 T	N/A	05/01/2025
Reference Standard:		**BS EN 13889/ HAL DOC: ST-GL-HAL-HSE-0420**			

Is this the first examination after Installation or assembly at a new site or location?	YES		NO	√	Was the examination carried out:			
					Within an interval of 6 months?	YES	√	NO	
					With an interval of 12 months?	YES		NO	√
If the answer to the above question is YES has the equipment been installed correctly?	YES		NO		In accordance with an examination scheme?	YES	√	NO	
					After the occurrence of exceptional circumstances?	YES		NO	√

Identification of any part found to have a defect which is or could not become a danger to persons and a description of the defect: (If none Sate NONE) NONE				
Is the above a defect which is of immediate danger to persons:	YES		NO	√
Is the above a defect which is not yet but could become a danger to persons (If YES state the date by when)	N/A			
Particulars of any repair, renewal or alteration required to remedy the defect identified above:				
Particulars of any tests carried out as part of the examination: (If none state NONE) The subject Items were inspected Visually and dimensionally where no signs of defects were observed at the time of inspection and found satisfactory				
IS THIS EQUIPMENT SAFE TO OPERATE?	YES	√	NO	

Name of Inspector:	Name of person authenticating this report:	Client Signature & Stamp:
ASHRAF ELSAID	MOHAMED ABDALLAH	ALi Talib HB48903 Date: 02-JULY-2025 Signature Haliburton
Date of Next Through Examination:	30/12/2025	

REV: 01 Dated: 20 June 2022

THIS IS TO CERTIFY THAT; a competent person did attend the above-mentioned owner's work location on the date shown above and the equipment described in this report was tested & inspected as per the requirements of Lifting Operations Lifting Equipment Regulation "LOLER". The result was found Satisfactory at the time of Inspection and considered Safe for Lifting.

Al TAKAMUL COMPANY FOR ENGINEERING TESTS
AND PROFESSIONAL SAFETY LIMITED
Basra, North Rumaila, Quality Control Yard - Iraq
Tel: +9647810009138 / +9647834964657
Email: OP@qualitycontrol-iraq.com / hany.akafi@qualitycontrol-iraq.com

CERTIFICATE OF THOROUGH EXAMINATION

This Certificate complies with the requirements of the Lifting Equipment Operations and Lifting Equipment Regulations

Date of Examination:	01/07/2025	Date of Report:	01/07/2025	Certificate No:	QC-WPS-25-0102/48
Client Name:	HALLIBURTON	Location:	WPS WORKSHOP	Job Number:	0102

Serial Number:	QTY	Description	SWL	Date of manufacture if known:	Date of last thorough examination
1061	1	**CABLE CLAMP** **MANUFACTURER:** COOPER MANUFACTURING & SUPPLY INC. **PO:** 450746247 **MAT:** PO-1341 **FOS:** 4:1	12.5K LBS	N/A	05/01/2025
Reference Standard:		HAL DOC: ST-GL-HAL-HSE-0420			

Is this the first examination after Installation or assembly at a new site or location?	YES		NO	√	Was the examination carried out:			
					Within an interval of 6 months?	YES	√	NO	
					With an interval of 12 months?	YES		NO	√
If the answer to the above question is YES has the equipment been installed correctly?	YES		NO		In accordance with an examination scheme?	YES	√	NO	
					After the occurrence of exceptional circumstances?	YES		NO	√

Identification of any part found to have a defect which is or could not become a danger to persons and a description of the defect: (If none Sate NONE) NONE				
Is the above a defect which is of immediate danger to persons:	YES		NO	√
Is the above a defect which is not yet but could become a danger to persons (If YES state the date by when)	N/A			
Particulars of any repair, renewal or alteration required to remedy the defect identified above:				
Particulars of any tests carried out as part of the examination: (If none state NONE) The subject Items were inspected Visually and dimensionally where no signs of defects were observed at the time of inspection and found satisfactory				
IS THIS EQUIPMENT SAFE TO OPERATE?	YES	√	NO	

Name of Inspector:	Name of person authenticating this report:	Client Signature & Stamp:
ASHRAF ELSAID	MOHAMED ABDALLAH	ALi Talib HB48903 Date: 02-JULY-2025 Signature Haliburton
Date of Next Through Examination:	30/12/2025	

REV: 01 Dated: 20 June 2022

THIS IS TO CERTIFY THAT; a competent person did attend the above-mentioned owner's work location on the date shown above and the equipment described in this report was tested & inspected as per the requirements of Lifting Operations Lifting Equipment Regulation "LOLER". The result was found Satisfactory at the time of Inspection and considered Safe for Lifting.

Al TAKAMUL COMPANY FOR ENGINEERING TESTS
AND PROFESSIONAL SAFETY LIMITED
Basra, North Rumaila, Quality Control Yard - Iraq
Tel: +9647810009138 / +9647834964657
Email: OP@qualitycontrol-iraq.com / hany.akafi@qualitycontrol-iraq.com

CERTIFICATE OF THOROUGH EXAMINATION

This Certificate complies with the requirements of the Lifting Equipment Operations and Lifting Equipment Regulations

Date of Examination:	01/07/2025	Date of Report:	01/07/2025	Certificate No:	QC-WPS-25-0102/49
Client Name:	HALLIBURTON	Location:	WPS WORKSHOP	Job Number:	0102

Serial Number:	QTY	Description	SWL	Date of manufacture if known:	Date of last thorough examination
32261-01-10	1	**ADAPTOR** X-OVER (TO DROP TOP LOAD CELL) P/N: 101211105 S.F: 4:1	26000 LBS	N/A	05/01/2025
Reference Standard:		HAL DOC: ST-GL-HAL-HSE-0420			

Is this the first examination after Installation or assembly at a new site or location?	YES		NO	√	Was the examination carried out:				
					Within an interval of 6 months?	YES	√	NO	
					With an interval of 12 months?	YES		NO	√
If the answer to the above question is YES has the equipment been installed correctly?	YES		NO		In accordance with an examination scheme?	YES	√	NO	
					After the occurrence of exceptional circumstances?	YES		NO	√

Identification of any part found to have a defect which is or could not become a danger to persons and a description of the defect: (If none Sate NONE) NONE				
Is the above a defect which is of immediate danger to persons:	YES		NO	√
Is the above a defect which is not yet but could become a danger to persons (If YES state the date by when)	N/A			
Particulars of any repair, renewal or alteration required to remedy the defect identified above:				
Particulars of any tests carried out as part of the examination: (If none state NONE) The subject Items were inspected Visually and dimensionally where no signs of defects were observed at the time of inspection and found satisfactory				
IS THIS EQUIPMENT SAFE TO OPERATE?	YES	√	NO	

Name of Inspector:	Name of person authenticating this report:	Client Signature & Stamp:
ASHRAF ELSAID	MOHAMED ABDALLAH	ALi Talib HB48903 Date: 02-JULY-2025 Signature Haliburton
Date of Next Through Examination:	30/12/2025	

REV: 01 Dated: 20 June 2022

THIS IS TO CERTIFY THAT; a competent person did attend the above-mentioned owner's work location on the date shown above and the equipment described in this report was tested & inspected as per the requirements of Lifting Operations Lifting Equipment Regulation "LOLER". The result was found Satisfactory at the time of Inspection and considered Safe for Lifting.

Al TAKAMUL COMPANY FOR ENGINEERING TESTS
AND PROFESSIONAL SAFETY LIMITED
Basra, North Rumaila, Quality Control Yard - Iraq
Tel: +9647810009138 / +9647834964657
Email: OP@qualitycontrol-iraq.com / hany.akafi@qualitycontrol-iraq.com

CERTIFICATE OF THOROUGH EXAMINATION

This Certificate complies with the requirements of the Lifting Equipment Operations and Lifting Equipment Regulations

Date of Examination:	01/07/2025	Date of Report:	01/07/2025	Certificate No:	QC-WPS-25-0102/50
Client Name:	HALLIBURTON	Location:	WPS WORKSHOP	Job Number:	0102

Serial Number:	QTY	Description	SWL	Date of manufacture if known:	Date of last thorough examination
17124	1	**LOADCELL** P/N: TLG-30A/7075 HES: 101298147 FOS: 4:1	30,000 LBS	N/A	05/01/2025
Reference Standard:		**HAL DOC: ST-GL-HAL-HSE-0420**			

Is this the first examination after Installation or assembly at a new site or location?	YES		NO	√	Was the examination carried out:				
					Within an interval of 6 months?	YES	√	NO	
					With an interval of 12 months?	YES		NO	√
If the answer to the above question is YES has the equipment been installed correctly?	YES		NO		In accordance with an examination scheme?	YES	√	NO	
					After the occurrence of exceptional circumstances?	YES		NO	√

Identification of any part found to have a defect which is or could not become a danger to persons and a description of the defect: (If none Sate NONE) NONE				
Is the above a defect which is of immediate danger to persons:	YES		NO	√
Is the above a defect which is not yet but could become a danger to persons (If YES state the date by when)	N/A			
Particulars of any repair, renewal or alteration required to remedy the defect identified above:				
Particulars of any tests carried out as part of the examination: (If none state NONE) The subject Items were inspected Visually and dimensionally where no signs of defects were observed at the time of inspection and found satisfactory				
IS THIS EQUIPMENT SAFE TO OPERATE?	YES	√	NO	

Name of Inspector:	Name of person authenticating this report:	Client Signature & Stamp:
ASHRAF ELSAID	MOHAMED ABDALLAH	ALi Talib HB48903 Date: 02-JULY-2025 Signature Haliburton
Date of Next Through Examination:	30/12/2025	

REV: 01 Dated: 20 June 2022

THIS IS TO CERTIFY THAT; a competent person did attend the above-mentioned owner's work location on the date shown above and the equipment described in this report was tested & inspected as per the requirements of Lifting Operations Lifting Equipment Regulation "LOLER". The result was found Satisfactory at the time of Inspection and considered Safe for Lifting.

Al TAKAMUL COMPANY FOR ENGINEERING TESTS AND PROFESSIONAL SAFETY LIMITED

Basra, North Rumaila, Quality Control Yard - Iraq

QUALITY CONTROL

CERTIFICATION OF VISUAl, THOROUGH EXAMINATON & MAGNETIC PARTICLE INSPECTION

Client:	HALLIBURTON	**Report No:**	QC-WPS-25-0102/51
Location:	WPS WORKSHOP	**Job Number:**	0 102
Date:	July 1, 2025	**Next Inspection Date:**	December 30, 2025
Type Of Inspection:	VISUAL , THOROUGH EXAMINATION & MAGNETIC PARTICLE INSPECTION	**Specification:**	ASTM E709 & ASTM E 1444 (2016) ASME V Article 7 (2019)

UNIT DESCRIPTION:	ELEVATOR HOOK		
UNIT S/N:	4507756731-10-1		
SWL:	30,000 LBS	**FOS:**	4:1

INSPECTION RESULT :

VISUAL , THOROUGH EXAMINATION	unit fully inspected and found free from deforms, cracks, corrosion & mechanical damage
MAGNETIC PARTICLE INSPECTION	Welds & forgn areas inspected and found free from cracks and other defects
FINAL RESULTS	unit found satisfactory and free of defects at the time of inspection

COMMENT:

Magnetic Particle Inspection With A/C Hand Yoke , Black & White Contrast

Equipment:	AC-Yoke Test Block	**Equipment:**	Digital Lux Meter	**Equipment:**	AC/DC Yoke	**INSPECTOR NAME:** Khalid Mahmoud	**SENIOR INSPECTOR:** NAVEED HUSSAIN
S.No:	1657	**S.No:**	2722003	**S.No:**	201504052		
Cal Due Date:	7-Oct-2025	Cal Due Date:	9-Oct-2025	Cal Due Date:	7-Oct-2025	**QUALIFICATION:** ASNT LEVEL II MT & PT & VT	**SUPERVISOR:** ASHRAF ELSAID
Black Magnetic Ink Manufacture:	Magnaflux	**Batch No:**	230604	**Expiry Date:**	MAY.2026		
Whie Contrast Paint Manufacture:	Magnaflux	**Batch No:**	230408	**Expiry Date:**	APRIL,2026	**STAMP & SIGNATURE:** Al Takamul Company LIF QUALITY CONTROL 10 For Engineering Services	**CLIENT:** ALI Talib HB48903 Date: 02-JULY-2025 Signature Haliburton

Technical Details:	**Magnetic Partical Concentration**	**Method**	**WMPT Light Intensity**
	1.2 to 2.4 ml/100 ml	Wet Magnetic Particle Testing (WMPT)	3670 Lux
Cal Due Date:13.APRIL.2025	Black Magnetic Ink Concentration 7 HF	1.2 to 2.4 ml/100 ml	EXPIRE DATE: 1-Jul-2025

Original - Client Files Copy - Area Office QC/FN/MPI/065 Rev.00 DATED 07 NOV 2021

Al TAKAMUL COMPANY FOR ENGINEERING TESTS AND PROFESSIONAL SAFETY LIMITED

Basra, North Rumaila, Quality Control Yard - Iraq

QUALITY CONTROL

CERTIFICATION OF VISUAl, THOROUGH EXAMINATON & MAGNETIC PARTICLE INSPECTION

Client:	HALLIBURTON	**Report No:**	QC-WPS-25-0102/52
Location:	WPS WORKSHOP	**Job Number:**	102
Date:	July 1, 2025	**Next Inspection Date:**	December 30, 2025
Type Of Inspection:	VISUAL , THOROUGH EXAMINATION & MAGNETIC PARTICLE INSPECTION	**Specification:**	ASTM E709 & ASTM E 1444 (2016) ASME V Article 7 (2019)

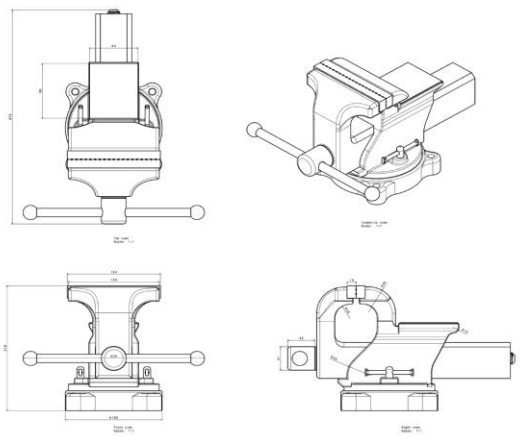

UNIT DESCRIPTION:	VICE
UNIT S/N:	VICE-1396
INSPECTION RESULT :	
VISUAL , THOROUGH EXAMINATION	unit fully inspected and found free from deforms, cracks, corrosion & mechanical damage
MAGNETIC PARTICLE INSPECTION	Welds & forgn areas inspected and found free from cracks and other defects
FINAL RESULTS	unit found satisfactory and free of defects at the time of inspection

COMMENT:

Magnetic Particle Inspection With A/C Hand Yoke , Black & White Contrast

Equipment:	AC-Yoke Test Block	**Equipment:**	Digital Lux Meter	**Equipment:**	AC/DC Yoke	**INSPECTOR NAME:** Khalid Mahmoud	**SENIOR INSPECTOR:** NAVEED HUSSAIN
S.No:	1657	**S.No:**	2722003	**S.No:**	201504052		
Cal Due Date:	7-Oct-2025	Cal Due Date:	9-Oct-2025	Cal Due Date:	7-Oct-2025	**QUALIFICATION:** ASNT LEVEL II MT & PT & VT	**SUPERVISOR:** ASHRAF ELSAID
Black Magnetic Ink Manufacture:	Magnaflux	**Batch No:**	230604	**Expiry Date:**	MAY.2026		
Whie Contrast Paint Manufacture:	Magnaflux	**Batch No:**	230408	**Expiry Date:**	APRIL,2026	**STAMP & SIGNATURE:**	**CLIENT:** ALI Talib HB48903 Date: 02-JULY-2025 Signature Haliburton

Technical Details:	**Magnetic Partical Concentration**	**Method**	**WMPT Light Intensity**
	1.2 to 2.4 ml/100 ml	Wet Magnetic Particle Testing (WMPT)	3670 Lux
Cal Due Date:13.APRIL.2025	Black Magnetic Ink Concentration 7 HF	1.2 to 2.4 ml/100 ml	EXPIRE DATE: 1-Jul-2025

Original - Client Files Copy - Area Office QC/FN/MPI/065 Rev.00 DATED 07 NOV 2021

Al TAKAMUL COMPANY FOR ENGINEERING TESTS AND PROFESSIONAL SAFETY LIMITED

Basra, North Rumaila, Quality Control Yard - Iraq

QUALITY CONTROL

CERTIFICATION OF VISUAl, THOROUGH EXAMINATON & MAGNETIC PARTICLE INSPECTION

Client:	HALLIBURTON	Report No:	QC-WPS-25-0102/53
Location:	WPS WORKSHOP	Job Number:	102
Date:	July 1, 2025	Next Inspection Date:	December 30, 2025
Type Of Inspection:	VISUAL , THOROUGH EXAMINATION & MAGNETIC PARTICLE INSPECTION	Specification:	ASTM E709 & ASTM E 1444 (2016) ASME V Article 7 (2019)

UNIT DESCRIPTION:	TRUCK CABIN LADDER
UNIT S/N:	Truck 1396 plate number 423 SAP 11335350

INSPECTION RESULT :

VISUAL , THOROUGH EXAMINATION	unit fully inspected and found free from deforms, cracks, corrosion & mechanical damage
MAGNETIC PARTICLE INSPECTION	Welds & forgn areas inspected and found free from cracks and other defects
FINAL RESULTS	unit found satisfactory and free of defects at the time of inspection

COMMENT:

Magnetic Particle Inspection With A/C Hand Yoke , Black & White Contrast

Equipment:	AC-Yoke Test Block	Equipment:	Digital Lux Meter	Equipment:	AC/DC Yoke
S.No:	1657	S.No:	2722003	S.No:	201504052
Cal Due Date:	7-Oct-2025	Cal Due Date:	9-Oct-2025	Cal Due Date:	7-Oct-2025
Black Magnetic Ink Manufacture:	Magnaflux	Batch No:	230604	Expiry Date:	MAY.2026
Whie Contrast Paint Manufacture:	Magnaflux	Batch No:	230408	Expiry Date:	APRIL,2026

Technical Details:	Magnetic Partical Concentration	Method	WMPT Light Intensity
	1.2 to 2.4 ml/100 ml	Wet Magnetic Particle Testing (WMPT)	3670 Lux
Cal Due Date:13.APRIL.2025	Black Magnetic Ink Concentration 7 HF	1.2 to 2.4 ml/100 ml	EXPIRE DATE: 1-Jul-2025

INSPECTOR NAME: Khalid Mahmoud		SENIOR INSPECTOR:	NAVEED HUSSAIN
QUALIFICATION: ASNT LEVEL II MT & PT & VT		SUPERVISOR:	ASHRAF ELSAID
STAMP & SIGNATURE:	Al Takamul Company LIF QUALITY CONTROL 10 For Engineering Services	CLIENT:	ALI Talib HB48903 Date: 02-JULY-2025 Signature Haliburton

Original - Client Files Copy - Area Office QC/FN/MPI/065 Rev.00 DATED 07 NOV 2021

Al TAKAMUL COMPANY FOR ENGINEERING TESTS
AND PROFESSIONAL SAFETY LIMITED
Basra, North Rumaila, Quality Control Yard - Iraq
Tel: +9647810009138 / +9647834964657
Email: OP@qualitycontrol-iraq.com / hany.akafi@qualitycontrol-iraq.com

CERTIFICATE OF THOROUGH EXAMINATION

This Certificate complies with the requirements of the Lifting Equipment Operations and Lifting Equipment Regulations

Date of Examination:	01/07/2025	Date of Report:	01/07/2025	Certificate No:	QC-WPS-25-0102/54
Client Name:	HALLIBURTON	Location:	WPS WORKSHOP	Job Number:	0102

Serial Number:	QTY	Description	SWL	Date of manufacture if known:	Date of last thorough examination
2304-1430	1	**LANYARD** MODEL: KT-SH001 MATERIAL: POLYMIDE MANUFACTURE: KURT Length: 1.8 (m)	310 LBS	04/2023	05/01/2025
Reference Standard:		**BS EN 355:2002/HAL DOC: ST-GL-HAL-HSE-0604**			

Is this the first examination after Installation or assembly at a new site or location?	YES		NO	√	Was the examination carried out:				
					Within an interval of 6 months?	YES	√	NO	
					With an interval of 12 months?	YES		NO	√
If the answer to the above question is YES has the equipment been installed correctly?	YES		NO		In accordance with an examination scheme?	YES	√	NO	
					After the occurrence of exceptional circumstances?	YES		NO	√

Identification of any part found to have a defect which is or could not become a danger to persons and a description of the defect: (If none Sate NONE) NONE				
Is the above a defect which is of immediate danger to persons:	YES		NO	√
Is the above a defect which is not yet but could become a danger to persons (If YES state the date by when)	N/A			
Particulars of any repair, renewal or alteration required to remedy the defect identified above:				
Particulars of any tests carried out as part of the examination: (If none state NONE) The subject Items were inspected Visually and dimensionally where no signs of defects were observed at the time of inspection and found satisfactory				
IS THIS EQUIPMENT SAFE TO OPERATE?	YES	√	NO	

Name of Inspector:	Name of person authenticating this report:	Client Signature & Stamp:
ASHRAF ELSAID	MOHAMED ABDALLAH	ALi Talib HB48903 Date: 02-JULY-2025 Signature Haliburton
Date of Next Through Examination:	30/12/2025	

REV: 01 Dated: 20 June 2022

THIS IS TO CERTIFY THAT; a competent person did attend the above-mentioned owner's work location on the date shown above and the equipment described in this report was tested & inspected as per the requirements of Lifting Operations Lifting Equipment Regulation "LOLER". The result was found Satisfactory at the time of Inspection and considered Safe for Lifting.

Al TAKAMUL COMPANY FOR ENGINEERING TESTS
AND PROFESSIONAL SAFETY LIMITED
Basra, North Rumaila, Quality Control Yard - Iraq
Tel: +9647810009138 / +9647834964657
Email: OP@qualitycontrol-iraq.com / hany.akafi@qualitycontrol-iraq.com

CERTIFICATE OF THOROUGH EXAMINATION

This Certificate complies with the requirements of the Lifting Equipment Operations and Lifting Equipment Regulations

Date of Examination:	01/07/2025	Date of Report:	01/07/2025	Certificate No:	QC-WPS-25-0102/55
Client Name:	HALLIBURTON	Location:	WPS WORKSHOP	Job Number:	0102

Serial Number:	QTY	Description	SWL	Date of manufacture if known:	Date of last thorough examination
2304-1430	1	**BODY HARNESS** MODEL: KT-SH001 MATERIAL: POLYMIDE MANUFACTURE: KURT Length: 1.8 (m)	310 LBS	04/2023	05/01/2025
Reference Standard:		**BS EN 361:2002/HAL DOC: ST-GL-HAL-HSE-0604**			

Is this the first examination after Installation or assembly at a new site or location?	YES		NO	√	Was the examination carried out:		
					Within an interval of 6 months?	YES √	NO
					With an interval of 12 months?	YES	NO √
If the answer to the above question is YES has the equipment been installed correctly?	YES		NO		In accordance with an examination scheme?	YES √	NO
					After the occurrence of exceptional circumstances?	YES	NO √

Identification of any part found to have a defect which is or could not become a danger to persons and a description of the defect: (If none Sate NONE) NONE				
Is the above a defect which is of immediate danger to persons:	YES		NO	√
Is the above a defect which is not yet but could become a danger to persons (If YES state the date by when)	N/A			
Particulars of any repair, renewal or alteration required to remedy the defect identified above:				
Particulars of any tests carried out as part of the examination: (If none state NONE) The subject Items were inspected Visually and dimensionally where no signs of defects were observed at the time of inspection and found satisfactory				
IS THIS EQUIPMENT SAFE TO OPERATE?	YES	√	NO	

Name of Inspector:	Name of person authenticating this report:	Client Signature & Stamp:
ASHRAF ELSAID	MOHAMED ABDALLAH	ALi Talib HB48903 Date: 02-JULY-2025 Signature Haliburton
Date of Next Through Examination:	30/12/2025	

REV: 01 Dated: 20 June 2022

THIS IS TO CERTIFY THAT; a competent person did attend the above-mentioned owner's work location on the date shown above and the equipment described in this report was tested & inspected as per the requirements of Lifting Operations Lifting Equipment Regulation "LOLER". The result was found Satisfactory at the time of Inspection and considered Safe for Lifting.