Al TAKAMUL COMPANY FOR ENGINEERING TESTS AND PROFESSIONAL SAFETY LIMITED

Basra, North Rumaila, Quality Control Yard - Iraq

QUALITY CONTROL

CERTIFICATION OF VISUAl, THOROUGH EXAMINATON & MAGNETIC PARTICLE INSPECTION

Client:	HALLIBURTON	**Report No:**	QC-WPS-25-0102/52
Location:	WPS WORKSHOP	**Job Number:**	102
Date:	July 1, 2025	**Next Inspection Date:**	December 30, 2025
Type Of Inspection:	VISUAL , THOROUGH EXAMINATION & MAGNETIC PARTICLE INSPECTION	**Specification:**	ASTM E709 & ASTM E 1444 (2016) ASME V Article 7 (2019)

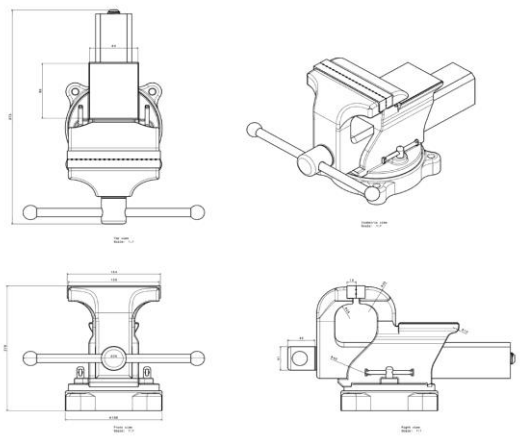

UNIT DESCRIPTION:	VICE
UNIT S/N:	VICE-1396
INSPECTION RESULT :	
VISUAL , THOROUGH EXAMINATION	unit fully inspected and found free from deforms, cracks, corrosion & mechanical damage
MAGNETIC PARTICLE INSPECTION	Welds & forgn areas inspected and found free from cracks and other defects
FINAL RESULTS	unit found satisfactory and free of defects at the time of inspection

COMMENT:

Magnetic Particle Inspection With A/C Hand Yoke , Black & White Contrast

Equipment:	AC-Yoke Test Block	**Equipment:**	Digital Lux Meter	**Equipment:**	AC/DC Yoke	**INSPECTOR NAME:** Khalid Mahmoud	**SENIOR INSPECTOR:** NAVEED HUSSAIN
S.No:	1657	**S.No:**	2722003	**S.No:**	201504052		
Cal Due Date:	7-Oct-2025	Cal Due Date:	9-Oct-2025	Cal Due Date:	7-Oct-2025	**QUALIFICATION:** ASNT LEVEL II MT & PT & VT	**SUPERVISOR:** ASHRAF ELSAID
Black Magnetic Ink Manufacture:	Magnaflux	**Batch No:**	230604	**Expiry Date:**	MAY.2026		
Whie Contrast Paint Manufacture:	Magnaflux	**Batch No:**	230408	**Expiry Date:**	APRIL,2026	**STAMP & SIGNATURE:**	**CLIENT:** ALI Talib HB48903 Date: 02-JULY-2025 Signature Haliburton

Technical Details:	**Magnetic Partical Concentration**	**Method**	**WMPT Light Intensity**
	1.2 to 2.4 ml/100 ml	Wet Magnetic Particle Testing (WMPT)	3670 Lux
Cal Due Date:13.APRIL.2025	Black Magnetic Ink Concentration 7 HF	1.2 to 2.4 ml/100 ml	EXPIRE DATE: 1-Jul-2025

Original - Client Files Copy - Area Office QC/FN/MPI/065 Rev.00 DATED 07 NOV 2021